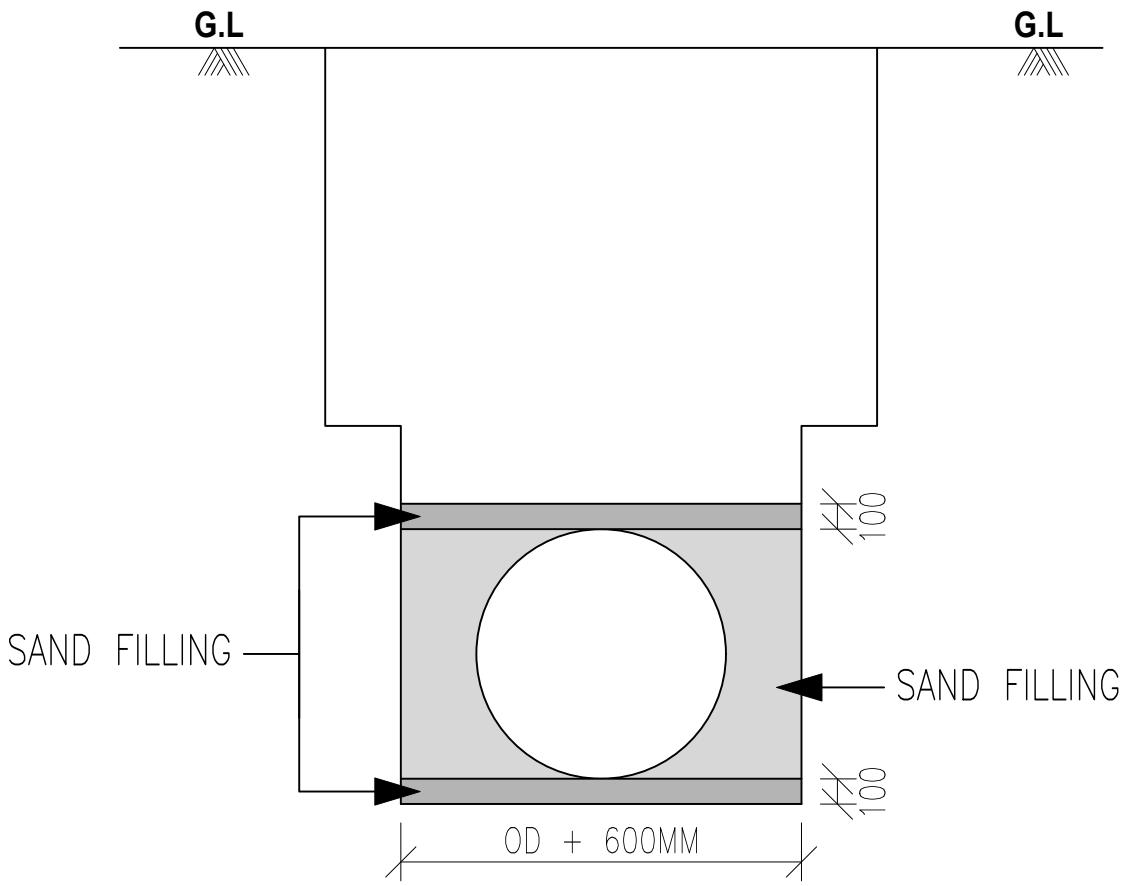

TYPICAL DETAILS OF PIPE TRENCH
DWC PIPE

NO	DATE	DESCRIPTION	REV. BY	CHK. BY

PROJECT: **TENDER DRAWING FOR LAYING OF WATER DISTRIBUTION NETWORK AND PROVIDING AND LAYING SEWERAGE NETWORK IN DIFFERENT CHAWLS OF GOMTIPUR WARD (PHASE-II) IN EAST ZONE OF AMC AREA.**

CLIENT: **AHMEDABAD MUNICIPAL CORPORATION**
AHMEDABAD

CONSULTANT: **Multi Media Consultants Pvt. Ltd.**
401, Shivalik Shilp, Iskcon Cross Road, S.G. Highway, Ahmedabad - 380 054.

TITLE: **TYPICAL DETAILS OF PIPE TRENCH FOR DWC PIPE**

DRAWN BY : DHIMANT PANCHAL	DESIGNED BY : V. D. BHATT	CHECKED BY : A. N. P.
SIGN :	SIGN :	SIGN :

DRG. NO. : **AMC-GOMATIPUR-II-WS-DR-05** | **SHEET : 1 OF 1**
SCALE : AS SHOWN | DATE : 22/06/2026 | PROJ. NO. : | REVISION : **R0**

H:\Enviro Dep\Amc\WaterSupply\Chawl\East Zone\Gomtipur Phase-II\Tender\Tender Drawings\InBox\05. Pipe Trench-DWC-Sewerage.dwg, Login : Hemal.kansara, 22-06-2026 17:06:56